AMERICAN LOUVER COMPANY®

Submittal

Stratus Cone Diffusers

T-bar Lay-In
24” x 24”

Duct/Neck Size

- ☐ 6”
- ☐ 8“
- ☐ 10”
- ☐ 12”
- ☐ 14”

Color

- ☐ White
- ☐ Black
- ☐ Custom

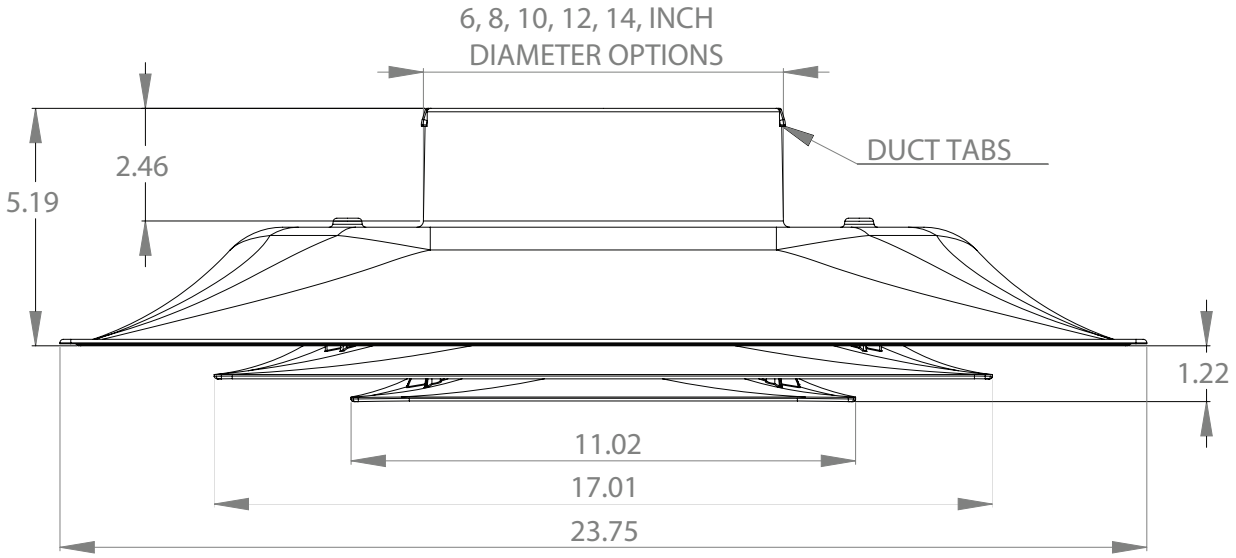

Fire Rating

- ☐ UL 94HB
- ☐ UL 2043 (highest rating)

Chose From:

UL 94HB RATED PLASTIC or

UL 2043 RATED PLASTIC

18-8 Stainless Steel Screws
(non-magnetic)

Job:_____

Location:_____

Architect:_____

Engineer:_____

Contractor:_____